Sewage Impact Study and

Conceptual Design Brief

Proposed Housing Development (Armstong Estates)

Township of Mulmur, County of Dufferin

Prepared for:
2735528 ONTARIO INC.

Prepared by:
Azimuth Environmental
Consulting, Inc.

September 2021

AEC 21-158

AZIMUTH ENVIRONMENTAL CONSULTING, INC.
Environmental Assessments & Approvals

September 21, 2021 AEC 21-158

2735528 Ontario Inc.
12 Trotter Court
Barrie, ON
L4N 5S4

Attention: David Seaman

Re: Sewage Impact Study/ Conceptual Septic Design
Proposed Housing Development (Armstong Estates)
937045 Airport Road, Mansfield, ON
Lot 11, Concession 7, Township of Mulmur, County of Dufferin

Dear Mr. Seaman:

Azimuth Environmental Consulting, Inc. (Azimuth) is pleased to submit a sewage impact study which includes the conceptual design concepts for the sewage works to support a proposed Draft Plan of Subdivision located on Lot 11, Concession 7 (Mansfield), Township of Mulmur, County of Dufferin.

Based on the results of the sewage impact study, it is concluded that the environmental conditions upon the Site will allow for 67 residential dwellings to be developed in compliance with the Ministry of the Environment, Conservation and Parks (MECP) Reasonable Use Policy (RUP) and without adverse impact to the local ground water regime and adjacent water supplies (where applicable). This is contingent upon the use of an Ontario Building Code (OBC) approved tertiary treatment system which is sufficient to protect the natural environment and will not result in any negative impact on the ground water quality.

The conceptual design concepts have been provided to illustrate that each individual lot and/ or communal block is sufficiently large enough to house a disposal bed while meeting all OBC setback requirements in the final design.

642 Welham Road, Barrie, Ontario L4N 9A1
telephone: (705) 721-8451 • fax: (705) 721-8926 • info@azimuthenvironmental.com • www.azimuthenvironmental.com

If you have any questions or require additional information, feel free to contact the undersigned.

Yours truly,
AZIMUTH ENVIRONMENTAL CONSULTING, INC.

Jackie Coughlin, B.A.Sc., P.Eng.
Senior Environmental Engineer

Table of Contents

List of Appendices

1.0 INTRODUCTION

Azimuth Environmental Consulting (Azimuth) was retained by 2735528 Ontario Inc. to provide a sewage impact evaluation to support the creation of 67 new residential dwellings. The purpose of the impact assessment is to evaluate the risk of adverse effects from sewage, from the point where it enters the subsurface, on ground water resources (and/ or ground water users). Once the risks are evaluated, the level of sewage treatment (i.e., standard or tertiary) required can be confirmed.

Risks from septic systems have been evaluated having consideration for the Ministry of the Environment, Conservation and Parks (MECP) RUP (Procedure B-7-1) and MECP Procedure D-5-4: Technical Guidelines for Individual Onsite Sewage Systems: Water Quality Impact Assessment (MECP, 1996). These methodologies evaluate the minimum dilution or attenuation observed for assessing impacts of sewage disposal on the ground water quality at the downgradient property boundary, and is based on the same derivative calculations.

In addition to the sewage impact assessment, the conceptual design concepts for an individual and/ or communal septic bed system has been provided to illustrate that each lot and/ or block is sufficiently large enough to house a disposal bed system while meeting all OBC setback requirements in the final design.

The remainder of this report presents the background information and provides the results of our evaluation and associated conclusions and recommendations.

2.0 BACKGROUND

The Site is located on Lot 11, Concession 7, Township of Mulmur, County of Dufferin. The civic address is 937045 Airport Road, Mansfield, ON. The 24.5 ha site is irregular in shape and is located in the northeast quadrant of the County Road 17 and Airport Road intersection in Mansfield. The Site is currently being utilized for agricultural purposes and is surrounding by residential and agricultural
land uses.

As shown on the Draft Plan of Subdivision (IPS, 2021), the Site includes 42 single residential lots with a minimum lot size of 2,000 m^2 (Lots 1 - 42). Proposed concepts for the single residential lots include an approximate 350 m^2 single family dwelling with up to four bedrooms and an OBC approved tertiary treatment system for the management of sewage. The septic layout plan and the preliminary design concepts for a conventional filter bed system are provided on Drawings 1 and 2, respectively (Appendix A).

As shown on the Draft Plan of Subdivision (IPS, 2021), the Site also includes ten (10) residential semi detached lots (Lots 43-47), and fifteen (15) residential townhome lots (Block 48, 49, and 50). Proposed concepts for the semi detached and townhome lots include an approximate 111.5 m^2 dwelling with two or three bedrooms and/or a den. These units will be served by one of three 'communal' tertiary treatment systems each rated for ~9,900Lpd and situated on Blocks 51, 52, and/ or 53. The septic layout plan and preliminary design concepts for a typical communal disposal bed system are provided on Drawings 1 and 3, respectively (Appendix A).

3.0 ENVIRONMENTAL SETTING

A geotechnical / hydrogeological investigation was completed by Peto MacCallum Ltd. (PML, 2021), in part, to provide the regional environmental setting and assess the parameters for septic design including water table and subsurface soil conditions, permeability, percolation rates, ground water flow direction and gradient, and ground water quality/ quantity.

A total of 12 boreholes were advanced across the Site by PML to depths of between 5 to 10 metres below ground surface (m bgs), eight (8) of which were retrofitted with monitoring wells. Slug testing, water quality sampling and grain size analyses were completed at select locations. This information has been relied upon for the sewage impact assessment but will not be discussed in detail here. A brief summary of key results is provided below:

- The area is defined as moderately sloping with 9m of relief.
- The Site slopes in a general northeasterly direction at elevations of 304 metres above sea level (m ASL) to 313.2 m ASL.
- The regional ground water table is believed to be below the depth of exploration. Local near surface perched ground water stabilized at 1.0 to 5.8 m below existing grade, corresponding to elevation 302.2 to 306.3 m ASL.
- Shallow ground water flow is inferred to be in a general northeasterly direction toward the Pine River tributary which crosses the eastern portion of the Site (PML, 2021)
- Soils are comprised of sand and silt mixtures with layers of clayey silt, sandy silty clay and clay.
- The upper sand and silty sand were estimated to have a K of $x10^{-3}$ to 10^{-4} cm/sec, with corresponding T-Times of 8 to 12 (min/cm); and

4.0 PRELIMINARY SEWAGE DESIGN CONCEPTS

4.1 Individual Septic Systems with Tertiary Treatment

The intent of this section is to provide the preliminary sewage system design concepts for an individual residential lot. The conceptual design of the proposed sewage system assumes a conventional filter bed with tertiary treatment technology and use a percolation rate of ≤15 min/cm, which is conservative.

4.1.1 Sewage Volumes

The peak daily design volume for a single residential lot is estimated to be 3,500 Lpd and is based on Ontario Building Code (1997 and updates) for a dwelling that is ≤350 m^2 with up to four bedrooms and up to 40 fixtures units. Assumptions used in the calculation are provided in Table 1.

Table 1: Peak Daily Design Volume (Individual Septic System)

Facility	No. of Units	OBC Sewage Volumes (L/day)		Total Sewage Volume (L/day)
A. Dwelling:				
No of new bedrooms	4	2000	L /4-bedroom unit	2,000
A. Sewage Volume (5-bedroom dwelling)				**2,000**
B) Additonal Sewage Volume for[1]:				
i) Additional bedrooms		total No. of bedrooms		
each bedroom over 5	0	500	L/ bedrooms over 5	0
or				
i) Sewage Volume (bedrooms over 5)				0
ii) Finished Floor Area	350		sqft	0
Remaining area >200m2	150		m^2	
each $10m^2$ >200-400m^2	150	100	L/ $10m^2$ >200m^2	1,500
each $10m^2$ >400-600m^2	0	75	L/ $10m^2$ >400m^2	0
each $10m^2$ >600m^2	0	50	L/ $10m^2$ >600m^2	0
or				
ii) Sewage Volume (finished floor area)				**1,500**
iii) Fixture Units	40	total units		
No. of fixture units >20	20	50	L/ per fixture >20	1,000
iii) Sewage Volume (fixture counts > 20)				1,000
B. Additonal Sewage Volume[1]				**1,500**
Total Daily Design Sewage Volume (A+B)				**3,500**

[1]Calculation resulting in the highest flow shall be used in determining the additional sewage volume

[2]Total finished area, excluding the area of the finished basement (OBC)

4.1.2 Sewage Treatment and Disposal

For the purposes of this evaluation, the proposed septic system will consist of a tertiary treatment unit (e.g., Norweco, Waterloo Biofilter or approved equivalent) with discharge to an in-ground filter bed designed with an estimated percolation rate (T-time) of ≤15 min/cm. A standard septic system utilizes a septic tank with a minimum volume of 3,600 litres (or 2x the design volume for residential use). In this case, the minimum volume of the septic tank is estimate to be 7,000L (2x the estimated design volume).

The filter bed will be constructed in a manner consistent with that stipulated in OBC Section 8.7.5.2(5). The filter bed system requires even distribution of the treated effluent over an adsorption system consisting of a 300mm stone layer overlying 750mm of an unsaturated sand layer (filter medium). The contact area between the filter medium and the native soil is sized so that its area is equivalent to the product of the peak flow and native soil percolation rate divided by 850 (i.e., A = QT/850). The overlying stone layer is designed to provide an area equal to 100 L of treated water per square meter of stone (A = Q/100) when using tertiary treatment.

The conceptual layout and preliminary design concepts of a typical filter bed are provided on Drawings 1 and 3, respectively and the example calculations are provided below:

<u>Stone Area (loading on the sand filter medium)</u>
The calculation for the loading on the surface of the filter media (stone area) is based on the following OBC formula:

$A = \frac{Q}{100}$, where,

A – filter media surface area (m^2),
Q - peak daily septic discharge = 3,500 L/day (Table 2)
Loading rate with tertiary treatment = 100 L/m^2/day

Therefore,

$A = \frac{3500}{100} = 35m^2$ (effective area illustrated is 35 m^2)

Since the maximum area of the filter surface is less than 50 m^2, one filter bed encompassing an area of 35m^2 is proposed (e.g., 5 pipes @ 7 m long).

Sand Layer Filter Medium (Contact Area)

The calculation for the sand filter medium is based on the following OBC formula:

$A = \frac{QxT}{850}$, where,

Q = peak daily septic discharge = 3,500 L/day (Table 2)
T = infiltration rate for underlying soils = ≤15 min/cm (PEL, 2021)

$A = \frac{3{,}500x15}{850}$ =62 m^2 (effective area illustrated is 64 m^2)

Based on the above, the minimum required area of the sand filter medium is 64m^2. The filter medium material must meet the grading requirements as per Section 8.7.5.3 of the OBC.

4.2 Communal Septic Systems with Tertiary Treatment

4.2.1 Sewage Volumes

The peak daily design volume for a communal septic system will be ≤10,000Lpd and is based on the OBC (1997 and updates) for a unit that is ≤111.5 m^2 with two or three bedrooms and / or a den. Assumptions used in the calculation are provided in Table 2.

Table 2: Peak Daily Design Volume (Communal Septic Systems)

Dwelling Type	Communal Bed Location	No. of Units	OBC Sewage Volumes (L/day)		Total Sewage Volume (L/day)
Semi Detached	Block 53	6	1100	two bedroom	6,600
Semi Detached		2	1600	three bedrooms	3,200
				Total	**9,800**
Semi Detached	Block 52	2	1600	three bedrooms	3,200
Townhomes		6	1100	two bedrooms	6,600
				Total	**9,800**
Townhomes	Block 50	9	1100	two bedrooms	9,900
				Total	**9,900**

4.2.2 Sewage Treatment and Disposal

For the purposes of this evaluation, the proposed septic system will consist of a tertiary treatment unit (e.g., Norweco, Waterloo Biofilter or approved equivalent) with discharge to an in-ground Type A Dispersal Bed designed with an estimated percolation rate (T-time) of ≤15 min/cm. The minimum volume of the communal septic tank is estimated to be ≤20, 000L (2x the estimated design volume).

The Type A Dispersal Bed will be constructed in a manner consistent with that stipulated in OBC Section 8.7.7.1. The Dispersal bed system requires even distribution of the treated effluent over an adsorption system consisting of a 300mm stone layer overlying 300mm of an unsaturated sand layer. The sand layer is sized so that its area is equivalent to the product of the peak flow and the native soil percolation rate divided by 850 (i.e., A = QT/850 for t ≤15min/cm). The overlying stone layer is designed to provide an area equal to 50 L of treated water per square meter of stone (A = Q/50 for Q>3,000Lpd).

The conceptual layout and preliminary design concepts of a typical communal dispersal bed are provided on Drawings 1 and 3, respectively and the example calculations are provided below.

<u>Stone Layer</u>
The calculation for the stone area layer is based on the following OBC formula:

$A = \frac{Q}{50}$, where,

A – area of the stone layer (m^2),
Q - peak daily septic discharge = 9,900 L/day (Table 2)
Loading rate = 50 L/m^2/day for Q>3,000Lpd

Therefore,

$A = \frac{9900}{50} = 198m^2$ (effective area illustrated is 200 m^2)

<u>Sand Layer</u>
The calculation for the sand layer is based on the following OBC formula:

$A = \frac{QxT}{850}$, where,

Q = peak daily septic discharge = 9,900 L/day (Table 2)
T = infiltration rate for underlying soils = ≤15 min/cm (PEL, 2021)

$A = \frac{9900x15}{850}$ =174.7 m^2 (effective area illustrated is 200 m^2)

Based on the above, the minimum required area of the sand filter medium is 200m^2.

5.0 OBC SETBACKS

With the above, the OBC requires specific minimum spacing requirements for both the treatment unit (includes septic tanks), as well as the distribution piping of the tile field from structure, property line and/ or surface water features. A summary of the OBC minimum spacing requirements is provided in Table 3.

Table 3: OBC Setback Requirements

Site Feature	Treatment Unit (m)	Distribution Piping (m)
Structure	1.5	5
Well (watertight casing >6 m)	15	15
Any other well (dug well)	15	30
Lake	15	15
Pond	15	15
Reservoir	15	15
River	15	15
Spring not used as a source of potable water	15	15
Stream	15	15
Property Line	3	3

6.0 SEWAGE IMPACT STUDY

A ground water assessment is typically evaluated within the scope of the MECP Reasonable Use Policy (RUP Procedure B-7-1), and/ or MECP Procedure D-5-4 (MECP, 1996). The RUP describes acceptable levels of parameters that are permitted to reach the downgradient property boundary in the ground water regime.

In general, RUP is applicable to large sewage works with a point source discharge (i.e., treatment systems that generate >10,000 Lpd). As the sewage volumes for each lot are less than 10,000 Lpd, they are regulated under the OBC as deemed appropriate by the municipality. RUP does not strictly apply; however can be used as a guide to determine concentration levels at the downgradient property boundary and evaluate any undesirable environmental impacts from sewage disposal systems.

6.1 Nitrate Effluent Criteria

Nitrate (as nitrogen) is the main contaminant of concern for sewage works that discharge effluent to the ground water regime due to the potential for health related impacts in drinking water supplies. Under a Reasonable Use evaluation, the quality of drinking water must not be degraded by an amount in excess of 25% of the difference between background concentrations and the Ontario Drinking Water Quality Standard (ODWQS) for health related parameters (i.e., 10 mg/L for nitrate-N). Historical use of the RUP by municipalities has accepted the maximum compliance criteria for nitrate at the

downgradient property boundary as 10 mg/L (ODWQS for nitrate-N) for residential lot development.

6.2 Infiltration Rates

In 2008, the MECP modified the RUP assessment and have incorporated a constant quantity of dilution in the calculation (MECP, 2008). The quantity is 250 mm of water per year (mm/a) over the area of the contaminant plume. In contrast, an infiltration rate that is more representative of site specific conditions can be used to estimate the diluting volume. For the purposes of the RUP assessment, an infiltration rate of 235.8 mm/a is used and is based on the water budget analysis described in Section 5.2.1.

6.2.1 Water Budget

As part of this evaluation, a water budget was prepared using the Thornthwaite and Mather (1957) method. This method evaluates evapotranspiration based on monthly precipitation and temperature data. Residual soil saturation is a function of topography and soil type. Values were determined on a monthly basis, compiled from daily Environment Canada meteorological data at the Orangeville/ Mono Station between 1969 and 2019. The water budget calculates the effect of evapotranspiration and provides an estimated net monthly surplus or deficit. The surplus reflects the water available to runoff or infiltrate to the ground water regime.

The average annual water surplus is 393 mm representing the amount of water available annually to infiltrate into the ground water or run off as surface water. During this period, the average annual precipitation was 895 mm, the average annual rainfall was 671 mm, and the average annual evapotranspiration was 502 mm.

Infiltration factors for the Site were estimated based on the underlying soil, local topography, and ground cover as per Table 2 of the Ministry of Environment and Energy (MOEE) Hydrogeological Technical Information Requirements for Land Development Applications (1995). Considering the surficial geology (i.e., sand/silt with a percolation rate of between 8-12 min/cm) within the study area, the majority of the site being cultivated and the rolling topography of the Site it was determined that 60% of the water surplus will infiltrate across the Site. For the period of record, by multiplying the annual average precipitation surplus amount (393 mm/a) by the average soil infiltration rate (60%), infiltration is estimated to be approximately 235.8 mm/year for the Site.

6.3 Treated Effluent Nitrate Concentration

Typical nitrate (NO_3-N) values for weak to medium domestic sewage for a standard Class IV system range between 20 and 60mg/L (Metcalf & Eddy, 1972.) with an average concentration of 40 mg/L (NO_3-N). Depending on the tertiary treatment technology used,

nitrates can be reduced on average by at least 50% (i.e., Waterloo Biofilter system). For the purposes of the RUP assessment, a NO_3-N concentration of 20mg/L is used; however it is recognized that there are other technologies that can reach more than 67% removal of nitrate (i.e., Norweco's Hydro-Kinetic FEU system).

6.4 Dilution Area

RUP considers dilution only, and therefore it is highly conservative. Based on a review of the pervious areas illustrated on the Draft Plan of Subdivision (IPS, 2021), infiltration from approximately 80% of the property or 17.69 ha contributes to dilution. Notwithstanding, runoff from rooftops (typically 75%) from each of the dwellings would be available for infiltration over lawns area, thus our evaluation is conservative since all impervious area (e.g., dwelling, driveways, walkways, internal roadways) have been excluded from the dilution calculation.

6.5 Background Nitrate

The background NO_3-N concentrations in the shallow ground water ranged between 1.6 mg/L and 14 mg/L at the Site wells based on the most recent sampling (PML, 2021). It is our understanding that farming practices are ongoing thus the NO_3-N concentration is directly related to current and historical farming practices on the site and the application of nitrate in the form of fertilizers to enhance crop growth.

Section 5.1 of Guidelines D-5-4 recognizes the impact from agricultural practices can have on NO_3-N concentrations in the groundwater. The Guideline suggests that if it can be demonstrated the existing level of NO_3-N are the result of historical agricultural practices on the site (farming), nitrate levels will decline following the change in land use. For this site, the change in land use is expected to decrease onsite NO_3-N concentration in ground water over time.

MECP Guideline B-7-1 describes the background concentration to be used in the RUP calculations as "Background is considered to be the quality of ground water prior to any man-made contamination." Given that the nitrate concentrations observed at the Site are assumed to be related to agricultural fertilizer application, a pre-anthropogenic background of 0.2 mg/L is appropriate for this variable and is consistent with the MECP guideline since RUP uses this variable to reflect the concentration of the precipitation infiltrating on the property.

The value of ~10mg/L (NO_3-N) reflects the shallow ground water condition and represents the water that is underflowing the Site from upgradient areas, which is not used in the RUP calculation. However, the RUP allows the reviewer to consider site conditions in evaluating the "reasonable use" of the receiving ground water regime. In

this area, the shallow ground water regime could potentially be impacted by nitrate levels from agricultural practices however any contamination would be expected to decline over time.

6.6 Annual Sewage Volume

The average daily volume for a single residential home is typically between 800-1,000 Lpd. As per Procedure D-5-4 (MECP, 1996), the volume of sewage should not exceed 1,000 Lpd when evaluating contaminant attenuation for residential development. For the purposes of the analysis a value of 1,000 Lpd is used.

6.7 Nitrate Dilution Calculation

Assumptions utilized in the RUP evaluation for the severed parcel are as follows:

- The area contributing to ground water flow is based on the size of the property (exclusive of hard surfaces);
- Annual dilution infiltration rate of 235.8 mm/a;
- Natural background nitrate concentration from precipitation of <0.2 mg/L;
- Septic effluent average concentration of 40 mg/L (conventional treatment) 20 mg/L (tertiary treatment);
- Average daily flow of 1,000 Lpd (average flow per dwelling, MECP, 1996); and
- Nitrate concentration criteria at downgradient property boundary is ≤10 mg/L.

The RUP calculation is outlined below:

$$C_{rup} = \frac{Q_1 C_1 + Q_2 C_2}{Q_T}$$, where

Q_1 = (contribution from property) = total area (m^2) x infiltration (m/a) (17.69 ha *235.8 mm/a infiltration = 41,715 m^3/a);

C_1 = (background nitrate concentration from precipitation) ~ 0.2 mg/L;

Q_2 = (contribution from the disposal bed) = 1,000 Lpd per dwelling = 67,000 Lpd;

C_2 = (septic effluent nitrate concentration) = 40 mg/L (conventional treatment) and 20 mg/L (tertiary treatment);

Q_T = (total offsite discharge) = Q_1+Q_2; and

C_{RUP} = nitrate criteria at downgradient property boundary ≤10 mg/L.

The predicted concentration in the shallow ground water regime at the downgradient property boundary using conventional treatment is ~15.0 mg/L (as NO_3-N), which is

above the RUP criteria of 10 mg/L. Using tertiary treatment, the predicted concentration in the shallow ground water at the downgradient property boundary is reduced to 7.4 mg/L (as NO_3-N) which is below the RUP criteria. The calculations are provided in Appendix B.

Based on the physical characteristics of the Site, nitrate concentrations in the shallow subsurface would also be significantly reduced by nitrification and attenuation processes, as well as biological uptake, which are not considered within the RUP methodology. Denitrification also plays a primary role in polishing nitrate concentrations in the shallow subsurface which is also not factored in the RUP methodology. As such, impacts are expected to be minimal in nature as a result of the proposed development concepts.

7.0 CLOSURE

Based on the results of the sewage impact study, it is concluded that the environmental conditions upon the Site will allow up to 67 residential dwellings to be developed in compliance with the MECP Reasonable Use Policy RUP and without adverse impact to the local ground water regime and adjacent water supplies (where applicable). The results of the nitrate dilution calculation show that the net loading at the property boundary is 7.4 mg/L provided that tertiary treatment technology is used. The use of tertiary technology is sufficient to protect the natural environment and will not result in any negative impact on the ground water quality.

For the purposes of this evaluation, the proposed septic system will consist of an in-ground disposal bed and an estimated percolation rate of 15 min/cm. The footprint of the disposal bed has been provided to illustrate that the lots and/ or blocks are sufficiently sized to accommodate a tile field while meeting all OBC setbacks in the final design. The conceptual design is based on a conservative percolation rate which has resulted in a slightly larger bed. The exact location of each disposal bed system and the percolation rate used in the final design for each bed should be confirmed during detailed design and the associated permitting approvals process.

APPENDICES

Appendix A: Site Drawings
Appendix B: RUP Calculations
Appendix C: Grain Size Analysis

APPENDIX A

Site Drawings

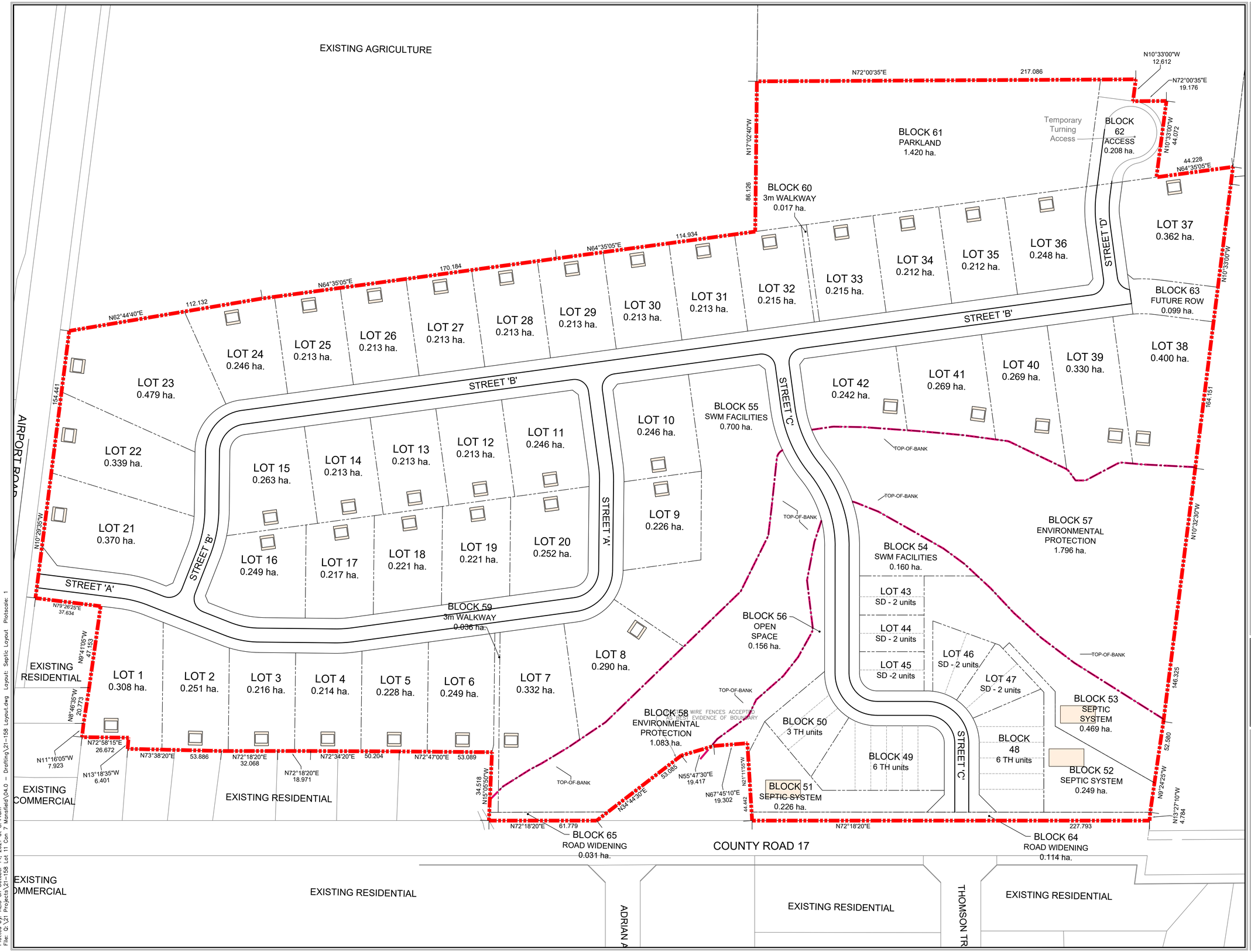

LEGEND:

- PROPERTY BOUNDARY
- LOT LINE
- 6.0m SETBACK FROM TOP-OF-BANK (IPS, SEPT. 2021)
- INDIVIDUAL SEPTIC BED FOOTPRINT ($64m^2$)
- COMMUNAL SEPTIC BED FOOTPRINT ($200m^2$)

NOTES:

1. FINAL LOCATION OF SEPTIC FOOTPRINT TO BE CONFIRMED DURING DETAILED DESIGN APPROVALS.

25m 0 50m
HORIZONTAL SCALE 1:1,000

NO.	DESCRIPTION	DATE	BY
2	SITE PLAN UPDATE	10/14/2021	J.C.
1	ISSUED FOR SITE PLAN APPROVAL	09/17/2021	J.C.

DESIGN BY / APPROVED:

AZIMUTH ENVIRONMENTAL CONSULTING, INC.

PRELIMINARY SEPTIC SYSTEM LAYOUT PLAN

ARMSTRONG ESTATES OF MANSFIELD
MULMUR, ON

DATE ISSUED:	SEPTEMBER 2021	DWG NO.
CREATED BY:	A.L.	1
PROJECT NO.:	21-158	
REFERENCE:	DUFFERIN COUNTY	

Plotted by: ALIU on October 14, 2021 at 8:44am
File: Q:\21 Projects\21-158 Lot 11 Con 7 Mansfield\04.0 - Drafting\21-158 Layout.dwg Layout: Septic Layout Plotscale: 1

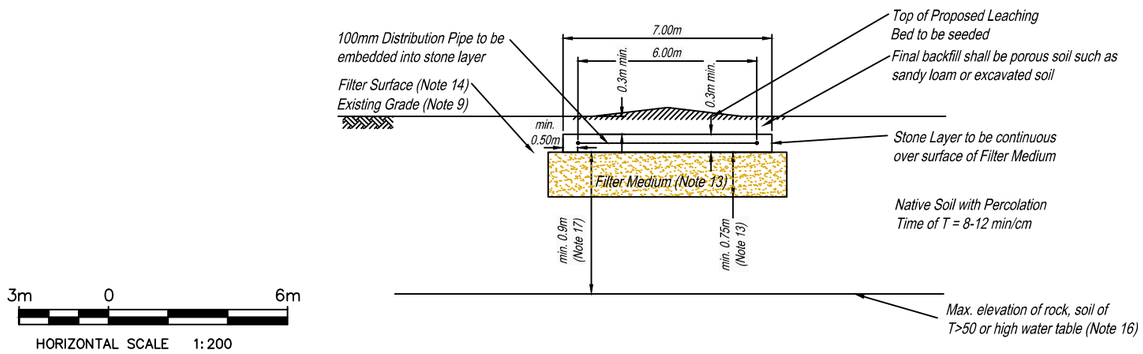

Section B-B'
2x Vertical Exaggeration

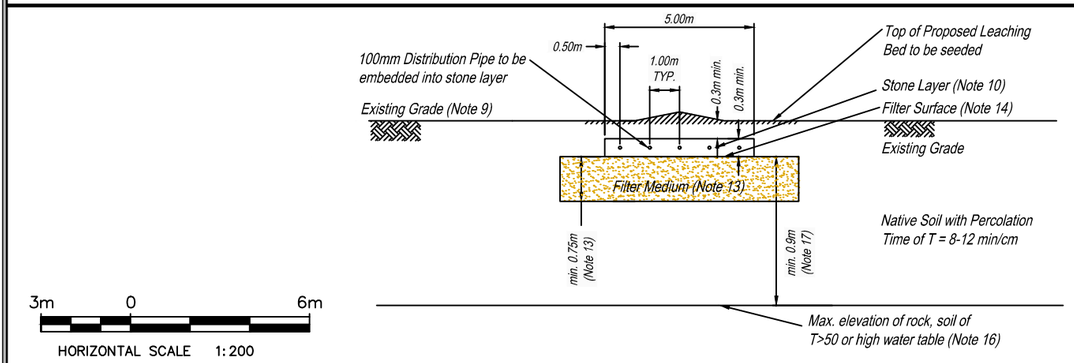

Section A-A'
2x Vertical Exaggeration

SEWAGE DESIGN BASIS (TYPICAL)

DESIGN FLOW:

Total Design Flow (Q) = 3,500 Lpd 4 bedrooms)

TREATMENT - FILTER BED

1) Surface Area of Filter Medium (stone layer)= Q/100 (with tertiary treatment)

A= 35.0 m^2

Effective Area provided = 35.0 m^2

Area= 5 x 7 m

2) Filter Sand Layer Area QT/850

Percolation Rate (T) = 8-12 min/cm (PEL 2021)

Design Percolation Rate (T) = 15 min/cm

A= 61.8 m^2

Effective Area Provided = 64 m^2

Area= 8 x 8 m

SEPTIC TANK VOLUME:

Volume= Qx2

Total Design Flow (Q) = 3500 L

Tank Volume Required 7000 L

Notes

1 Percolation rate to be confirmed on a lot by lot basis during detailed design approvals

2 Final location of bed, treatment tanks and dwelling to be confirmed during detailed design

3 Tertiary treatment technology to be confirmed during detail design approvals

General Notes for Leaching Filter Bed

1. All piping and plumbing materials must conform to the Plumbing Code.
2. All pipe installations must conform to the Plumbing Code.
3. All pipe connections shall be flexible and watertight.
4. The distribution pipe shall be sloped not less than 30mm and not greater than 50mm for each 10m of distribution pipe.
5. An adequate soil covering that is crowned and sheds water from the area bed is required.
6. The Filter bed shall not be constructed in a manner that can adversely affect the performance of the system such as compacting or smearing the native soils.
7. The filter bed shall not be constructed in a location that can adversely affect the performance of the system such as flood-prone areas or inappropriate slopes.
8. The side slope of the leaching bed fill shall be sloped to meet existing grade if applicable (to be confirmed in field).
9. Bed elevations assumed; elevation of bed(s) to be verified in the field by contractor/owner.
10. The stone layer in which the distribution pipe is set is continuous over the surface of the filter medium, and is comprised of stone which is either 19mm clear aggregate washed to be free of fine material, or clean gravel screened to be between 19 and 53mm
11. The stone layer shall be protected from clogging by an appropriate geotextile fabric covering.
12. Only filter material meeting grading requirements acceptable to the MOE for filter bed construction may be used.
13. The filter medium shall have a minimum depth of 750 mm below the stone layer and shall be clean sand comprised of particles ranging in size between the limits of,
    (a. an effective size of 0.25 mm with a uniformity coefficient not less than 3.5,
    (b. an effective size of 2.5 mm with a uniformity coefficient not greater than 1.5, and
    (c. having a uniformity coefficient not greater than 4.5.
14. Maximum area of filler surface is 50m².
15. Contact area between the filter and underlying soil must not be less than the Area =QT/850 where Q is the daily sewage flow and T is the percolation rate of the soil.
16. The surface of the filter medium must be 0.9m above rock, or soil with a T>50 min/cm or the high ground water table.
17. The minimum distance between septic tank and dwelling is 5m.
18. Percolation rate used in the design of the septic bed is based on the grain size analysis from soil sample provided by the PML (2021).

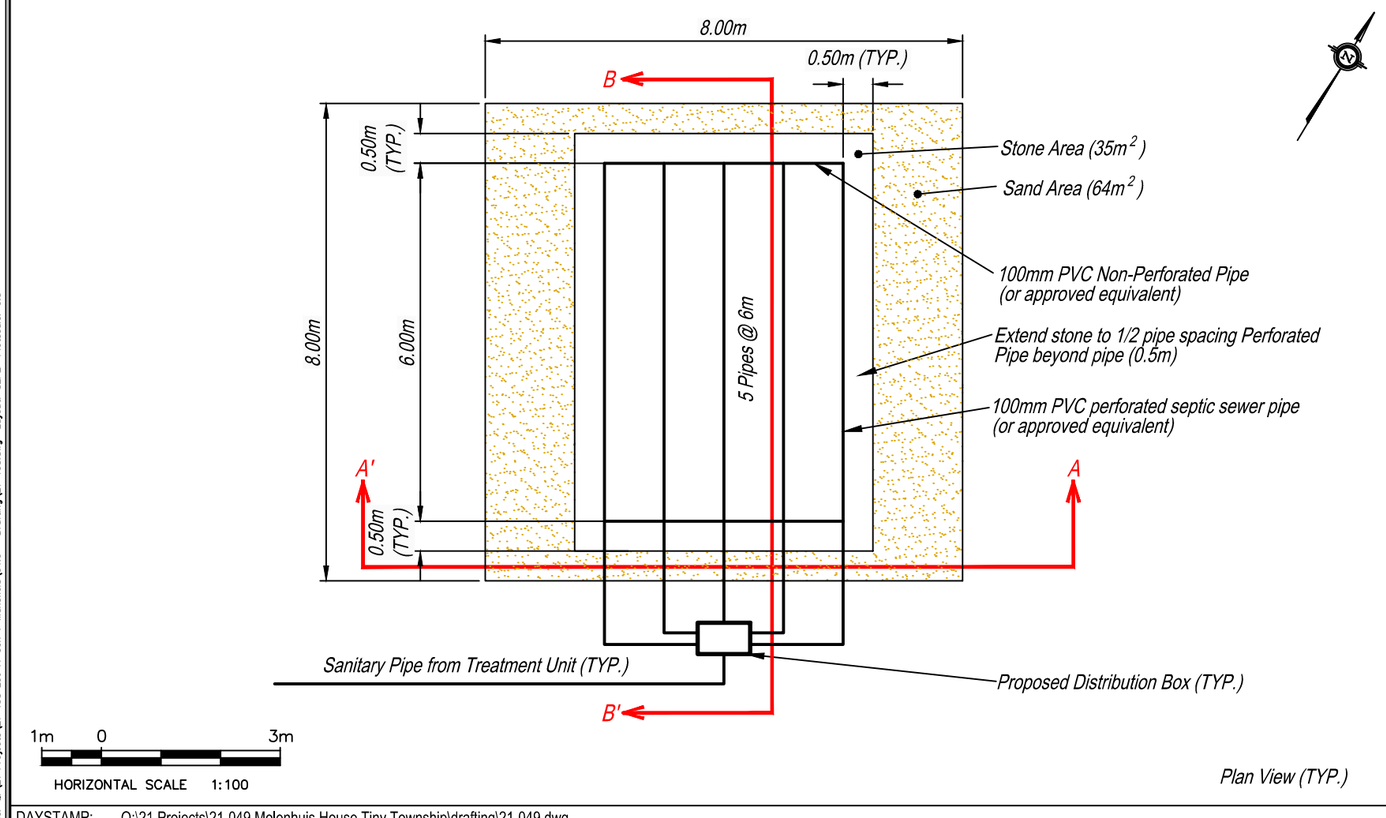

Plan View (TYP.)

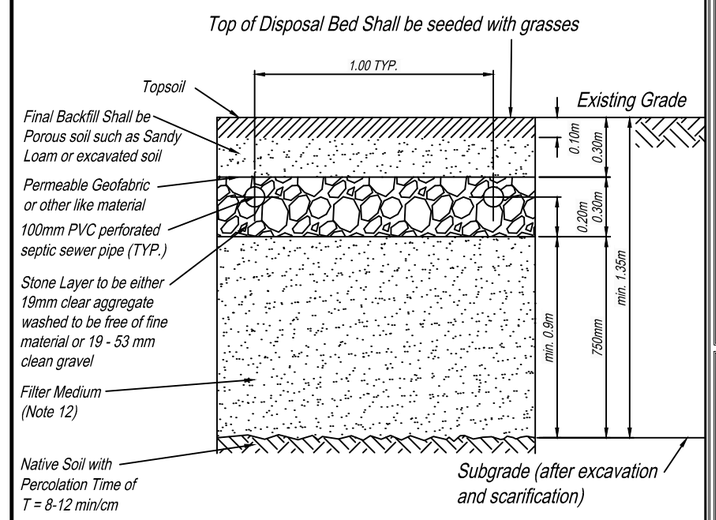

Disposal Bed Cross-Section (TYP.)

N.T.S.

No.	Description	Date	By
1	Issued For Site Plan Approval	07-09-2021	JC

Designed By:

AZIMUTH ENVIRONMENTAL CONSULTING, INC.

TYPICAL FILTER BED DESIGN
LOTS 1-42

ARMSTRONG ESTATES OF MANSFIELD
MULMUR, ON

DATE ISSUED:	SEPTEMBER 2021	Drawing No.
CREATED BY:	A.L.	2
PROJECT NO.:	21-158	
REFERENCE:		

DAYSTAMP: Q:\21 Projects\21-049 Molenhuis House Tiny Township\drafting\21-049.dwg

Plotted by: ALIU on September 8, 2021 at 1:32pm
File: Q:\21 Projects\21-158 Lot 11 Con 7 Mansfield\04.0 - Drafting\21-158.dwg Layout: SEP2 Plotscale: 0.5

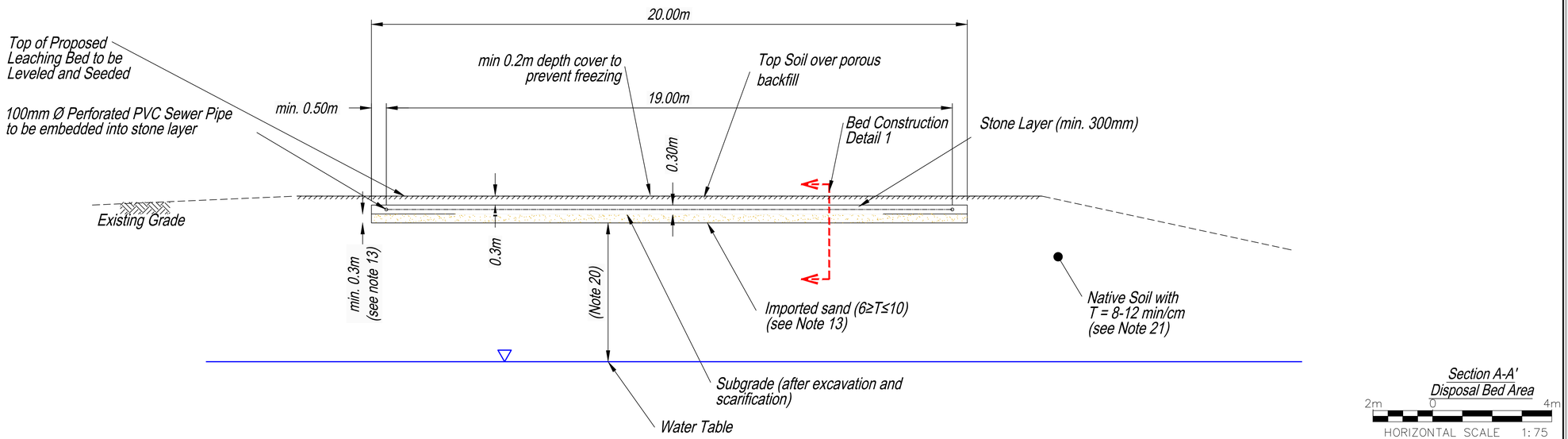

Section A-A'
Disposal Bed Area

2m 0 4m
HORIZONTAL SCALE 1:75

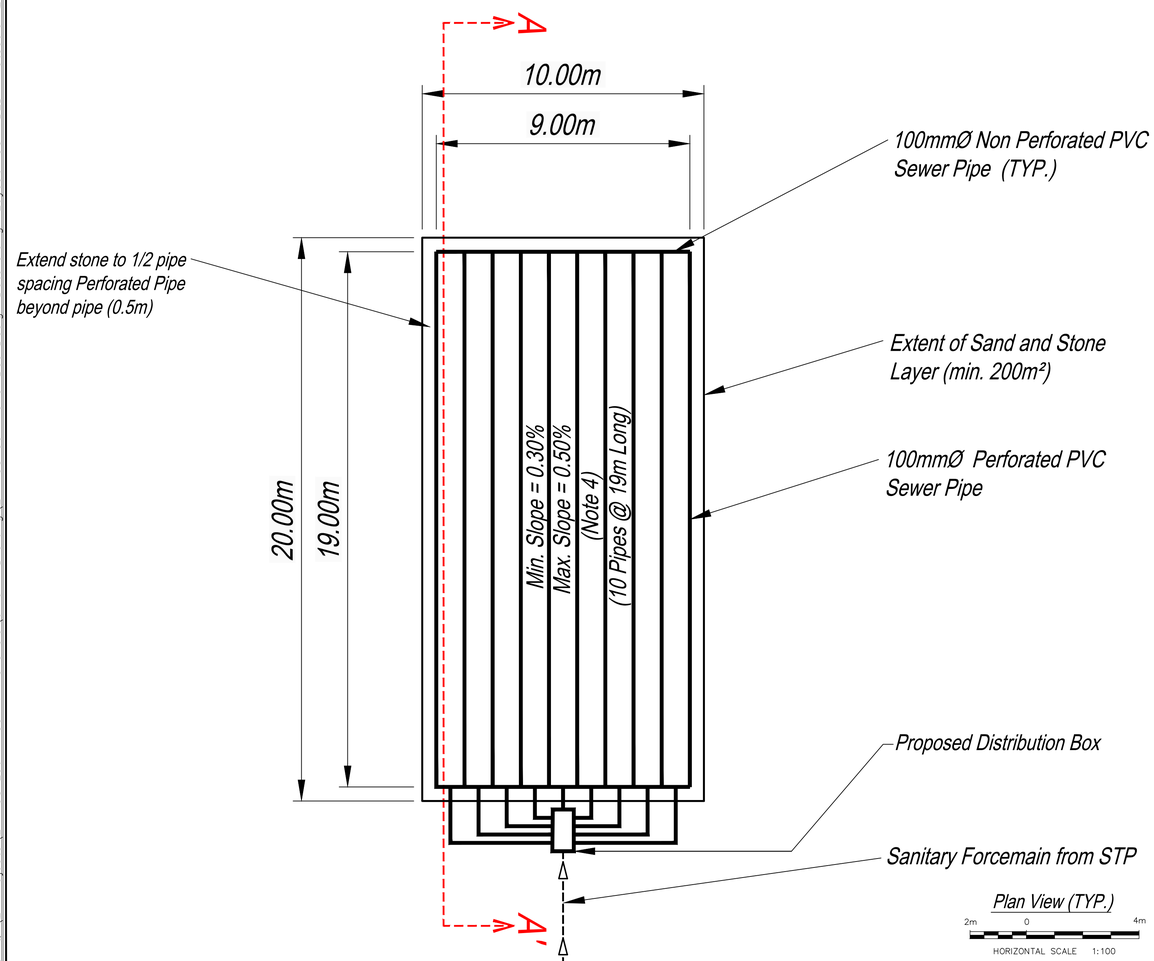

Plan View (TYP.)

2m 0 4m
HORIZONTAL SCALE 1:100

COMMUNAL SYSTEM SEWAGE DESIGN BASIS (TYPICAL)

DESIGN FLOW:

Total Design Flow (Q) < 9,900 Lpd

TYPE A DISPERSAL BED

1) Surface Area of Filter Medium (stone layer)= Q/50 (with tertiary treatment)

A= 198.0 m^2
Effective Area provided = 200.0 m^2
Area= 10 x 20 m

2) Filter Sand Layer Area QT/850

Percolation Rate (T) = 8-12 min/cm (PEL 2021)
Design Percolation Rate (T) = 15 min/cm
A= 174.7 m^2
Effective Area Provided = 200 m^2
Area= 10 x 20 m

SEPTIC TANK VOLUME:

Volume= Qx2
Total Design Flow (Q) = 9,900 L
Tank Volume Required 19800 L

Notes

1 Percolation rate to be confirmed on a lot by lot basis during detailed design approvals
2 Final location of bed and treatment tanks to be confirmed during detailed design approvals
3 Tertiary treatment technology to be confirmed during detail design approvals

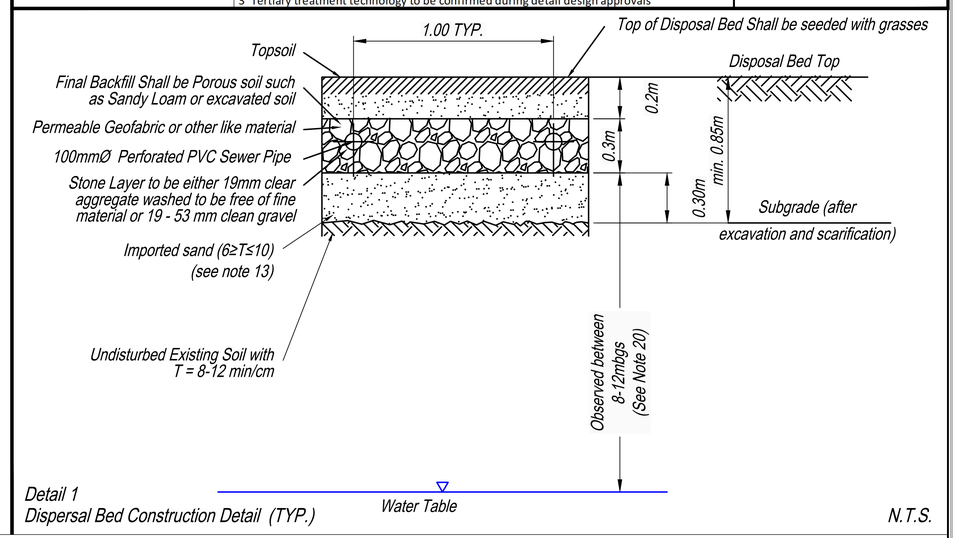

Detail 1
Dispersal Bed Construction Detail (TYP.)

N.T.S.

General Notes for Disposal Bed

1. All piping and plumbing materials must conform to the Plumbing Code.
2. All pipe installations must conform to the Plumbing Code.
3. All pipe connections shall be flexible and watertight.
4. The distribution pipe shall be sloped not less than 30mm and not greater than 50mm for each 10m of distribution pipe.
5. The distribution pipe shall be covered with the stone to a height of at least 50mm above the top of the distribution pipe.
6. An adequate soil covering that is crowned and sheds water from the area bed is required.
7. The Disposal bed shall not be constructed in a manner that can adversely affect the performance of the system such as compacting or smearing the native soils.
8. The disposal bed shall not be constructed in a location that can adversely affect the performance of the system such as flood-prone areas or inappropriate slopes.
9. Bed elevations assumed based on topographic survey (by others); all elevations to be verified in the field by septic installer/contractor.
10. The stone layer in which the distribution pipe is set is continuous over the surface of the disposal medium, and is comprised of stone which is either 19mm clear aggregate washed to be free of fine material, or clean gravel screened to be between 19 and 53mm
11. The stone layer shall be protected from clogging by an appropriate geotextile fabric covering.
12. Only disposal material meeting grading requirements acceptable to the MECP for disposal bed construction may be used.
13. As per OBC section 8.7.7.1(4), the sand layer must be comprised of sand that has a percolation rate of at least 6 and not more than 10 min/cm, not more than 5% fines passing through a 0.074 mm (No. 200) sieve, and a minimum thickness of 300 mm.
14. Construction of the disposal bed must adhere to requirements outlined in OBC Section 8.7.7 (Type A Dispersal Bed).
15. Contact area between the disposal and underlying soil must not be less than the Area =QT/850 where Bed Q is the daily sewage flow and T is the percolation rate of the soil.
16. Sanitary Pipes/Forcemains shall be insulated under roadways and walkways at a depth great enough to ensure protection against frost and crushing.
17. All gravity connections shall have a minimum 2% grade, unless otherwise specified.
18. Side slopes (if applicable) vary to a max of 4:1 or 3:1 if measures are taken to prevent erosion and ensure stability of leaching bed.
19. Location of disposal bed to be confirmed during detailed design.
20. Bottom of stone layer 0.6m above bedrock or highwater table or soil with T ≥ 50min/cm.
21. Percolation rate 8-12 min/cm (PEL, 2021).

No.	Description	Date	By
1	Issued For Site Plan Approval	07-09-2021	JC

Designed By:

AZIMUTH ENVIRONMENTAL CONSULTING, INC.

TYPICAL TYPE A DISPERSAL BED (COMMUNAL SYSTEM)

ARMSTRONG ESTATES OF MANSFIELD
MULMUR, ON

Date Issued:	SEPTEMBER 2021	Drawing No.
Created By:	J.L.M., A.L.	3
Project No.	21-158	
Reference:		

DAYSTAMP: Q:\20 Projects\20-328 Innisfil Creek GC Septic Design\04.0 - Drafting\20-328.dwg

Plotted by: AJU on September 21, 2021 at 9:02am
File: Q:\21 Projects\21-158 Lot 11 Con 7 Mansfield\04.0 - Drafting\21-158 Communal Bed Design Details.dwg Layout: COMMBED Plotscale: 2

APPENDIX B

RUP Calculations

REASONABLE USE CALCUATIONS
Armstrong Estates, Mansfield

Assumptions

Nitrate limit	10	mg/L	
No of Lots	67		
annual average precipitation surplus	393	mm/a	(orangeville Station)

Detailed Calculation

$$C_e = (C_p*P*A + C_s*Q_s + C_b*Q_b)/(P*A + Q_s + Q_b)$$

where

Downgradient Area	(A)	176,910	m^2	Pervious Area
Annual Infiltration Rate	(P)	236	mm	60% of surplus
Diluting Volume	(P*A)	41,715	m^3/a	
Aquifer Thickness	(b)	-	m	assumed
Aquifer Velocity	(v)	3.3E-06	m/s	assumed
		0.3	m/day	
Aquifer Cross-sectional Width	(l)	-	m	
Base Flow	(Q_b)	-	m^3/a	
Average Daily Sewage Volume	(Q_s)	67,000	L/day	Input (average Design Flow)
		24,472	m^3/a	
Effluent Nitrate Concentration	(C_s)	40.0	mg/L	standard treatment
Estimated Site Concentration	(C_e)	**14.8**	mg/L	>10mg/L (Nitrate Drinking Water Standard)

Downgradient Area	(A)	176,910	m^2	Pervious Area
Annual Infiltration Rate	(P)	236	mm	60% of surplus
Diluting Volume	(P*A)	41,715	m^3/a	
Aquifer Thickness	(b)	-	m	assumed
Aquifer Velocity	(v)	3.3E-06	m/s	assumed
		0.3	m/day	
Aquifer Cross-sectional Width	(l)	-	m	assumed
Base Flow	(Q_b)	-	m^3/a	
Average Daily Sewage Volume	(Q_s)	67,000	L/day	Input (average Design Flow)
		24,472	m^3/a	
Effluent Nitrate Concentration	(C_s)	20.0	mg/L	Tertiary treatment (15-25mg/L depending on technology)
Estimated Site Concentration	(C_e)	**7.4**	mg/L	<10mg/L (Nitrate Drinking Water Standard)

APPENDIX C

Grain Size Analysis

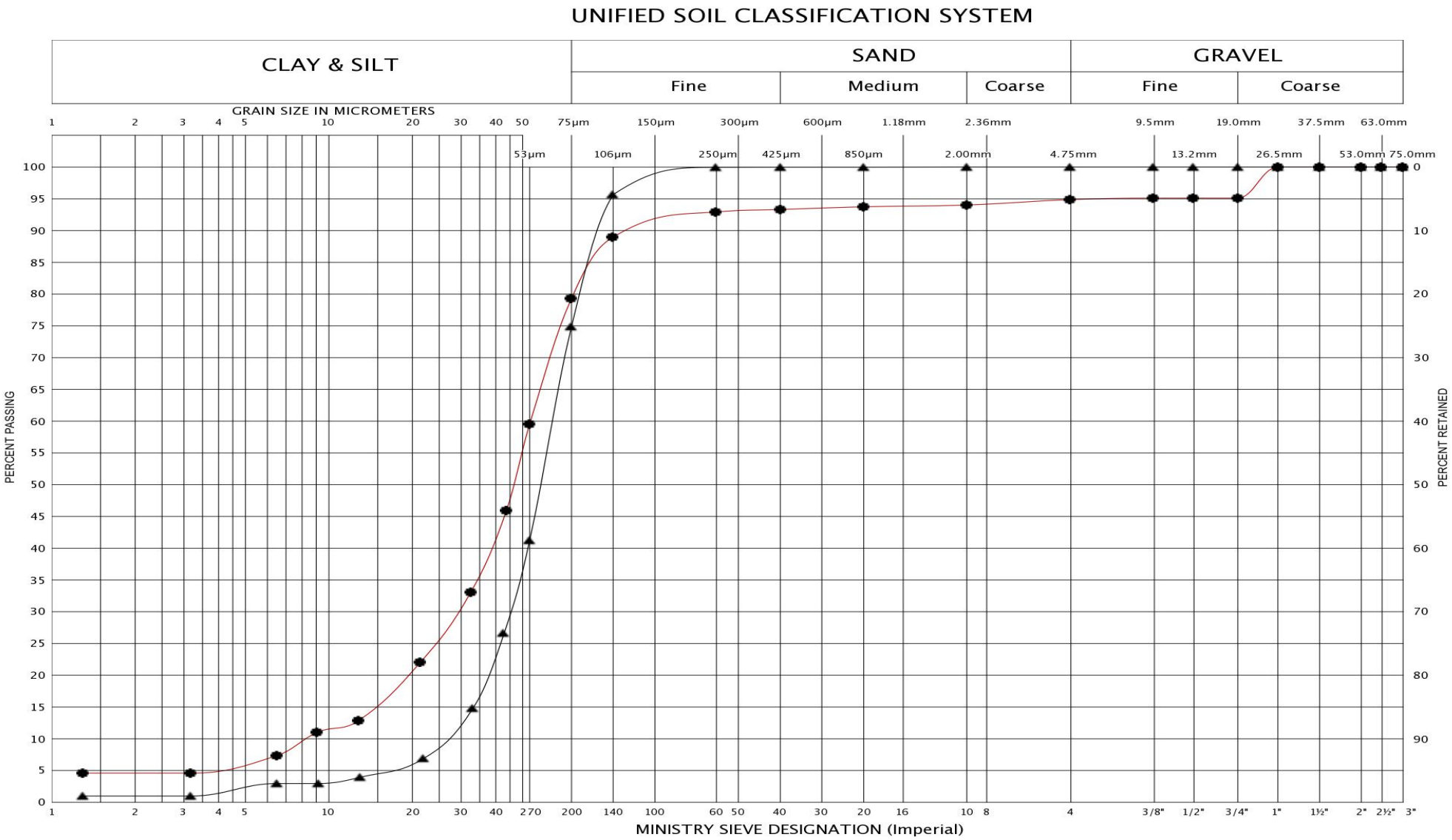

LEGEND	BH	11	12
	SAMPLE	5	5
	SYMBOL	●	▲

Peto MacCallum Ltd.
CONSULTING ENGINEERS

GRAIN SIZE DISTRIBUTION

SANDY SILT, Trace Clay, Trace Gravel

FIG No.: 1

Project No.: 21BF019